MONI COLLECTION

EXTRA LARGE TRIPLE PENDANT

SPECIFICATION SHEET

AUSTRALIA / INTERNATIONAL

ARTICOLO

MONI COLLECTION

EXTRA LARGE TRIPLE PENDANT

SPECIFICATION SHEET

AUSTRALIA / INTERNATIONAL

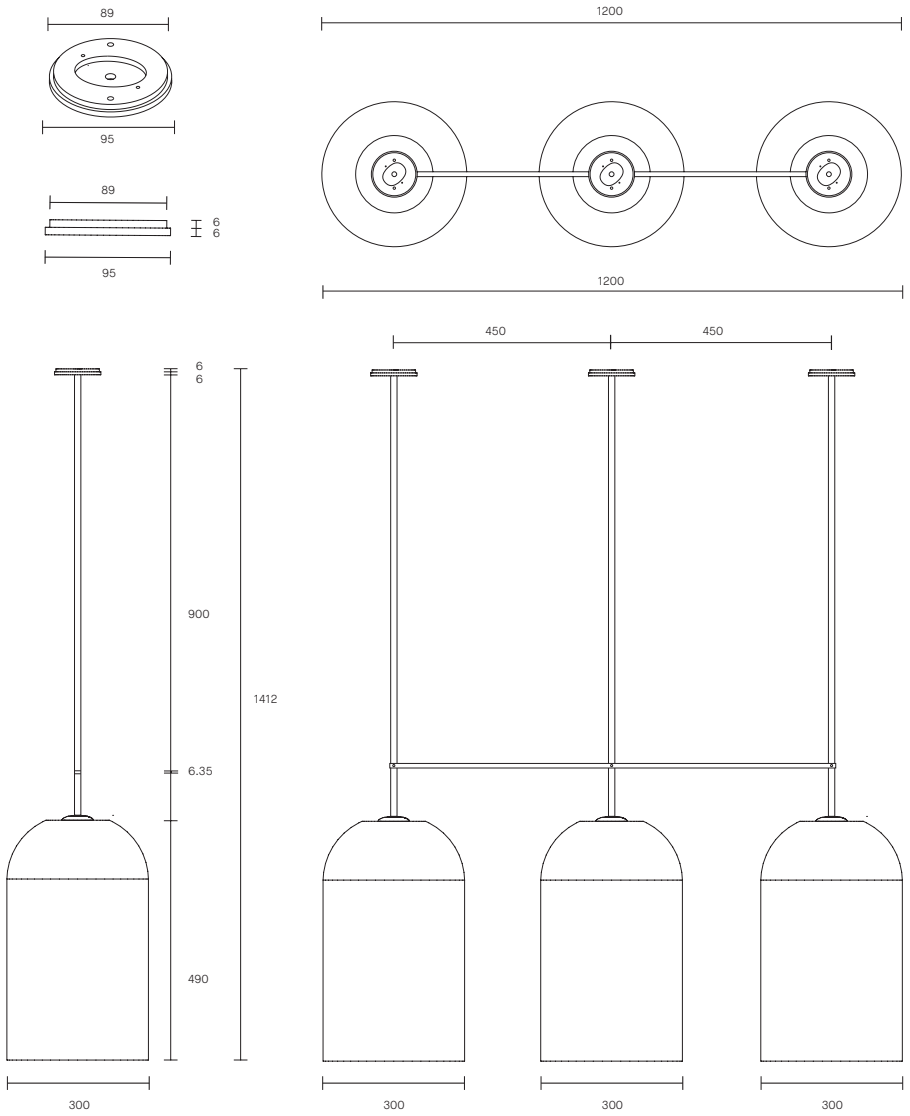

MO_XLTP_S_AU_19V2

ABOUT MONI

Moni is an innovative yet astute collection, its monochromatic palette softened by a gentle, fluid form that is perfectly complemented in proportion and balance.

The black and white dipped coloured shades add further dynamic, pairing the weightlessness of artisanal mouthblown glass with an opaque quality.

The Moni shade is removable for easy cleaning.

Moni is available in table lamp, floor lamp, wall sconce and pendant.

LEAD TIME

6 - 8 weeks

LIGHT SOURCE

3 x 240V, E14, 95mm 60W Convertible

Dimmable

WEIGHT

26 kg

DIMENSIONS

Variations to rod length and spacing bar width can be specified at time of order placement

FITTING FINISH

Articolo Black
Matte White
Brass (cover)
Mid Bronze

SHADE COMBINATIONS

White with Clear (cover)